M-10383 2

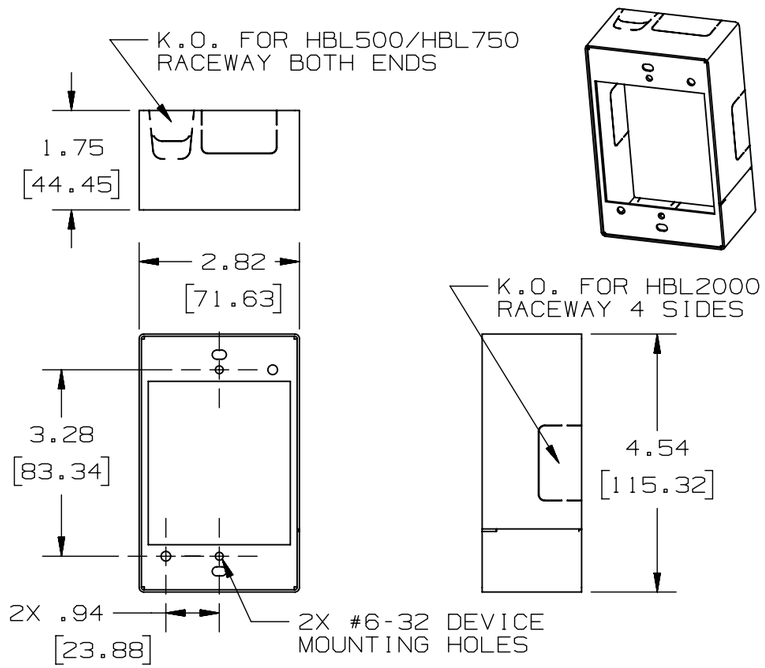

BOX COVER				
CAT. NO.	COLOR	CAT. NO.	COLOR	VOLUME
HBL2048IV	IVORY	HBL2048W	WHITE	20.0in³
HBL2048GY	GRAY	HBL2048BK	BLACK	[327.6cm³]

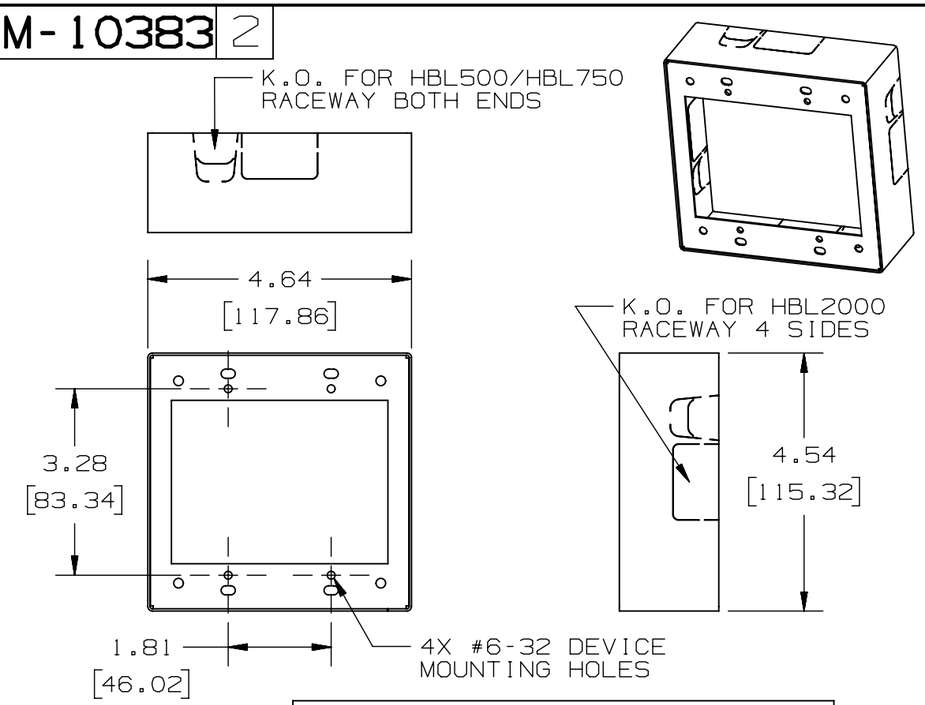

BOX COVER		
CAT. NO.	COLOR	VOLUME
HBL20482IV	IVORY	33.5in³
HBL20482GV	GRAY	[548.7cm³]

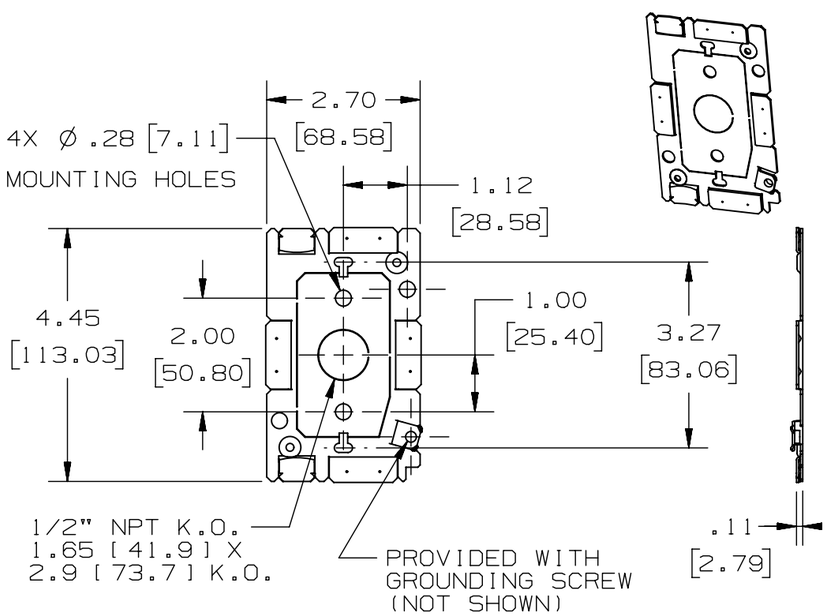

BOX BASE
CAT. NO.
HBL2048IV, HBL2048GY
HBL2048W & HBL2048BK

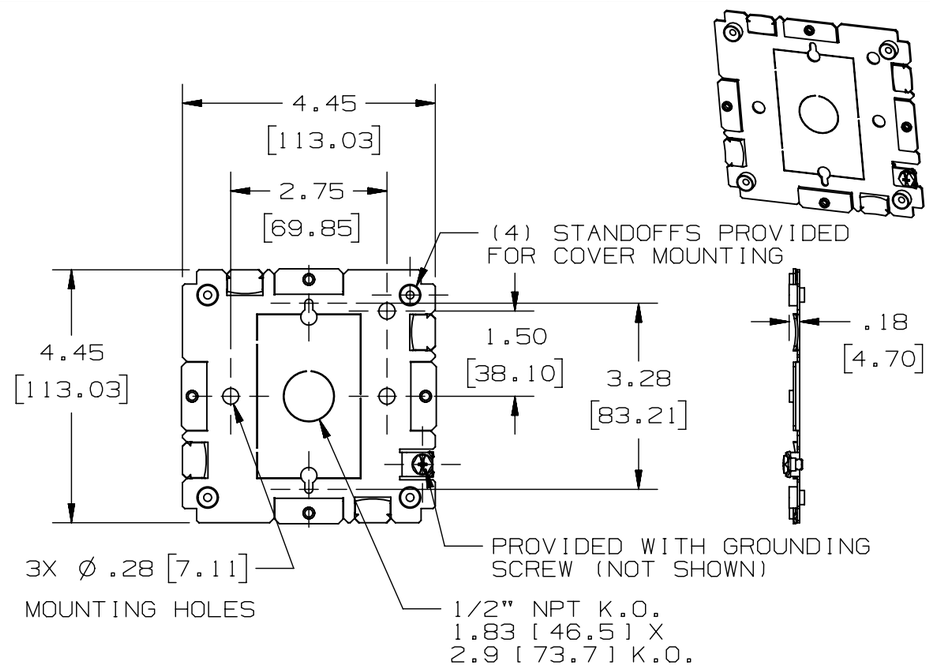

BOX BASE
CAT. NO. HBL20482IV & HBL20482GY

NOTE: ALL DIMENSIONS IN INCHES AND [MM]

CODE 74545

LIST OF PARTS		
DESCRIPTION	MATERIAL	FINISH
BOX COVER	STEEL	PAINTED
BOX BASE	STEEL	GALVANIZED

SYM	REVISIONS	APP	DATE
2	ADDED HBL2048W & HBL2048BK PER DCN#23036	EMD	4/18/17
1	RELEASED PER DCN13549	SRE	11/14/06

THE DESIGN AND DIMENSIONS OF THE PRODUCT SHOWN ON THIS DRAWING ARE SUBJECT TO CHANGE WITHOUT NOTICE

TITLE
BOX COVERS & BASES
1-GANG & 2-GANG
HBL2000 SERIES

TOLERANCES UNLESS OTHERWISE SPECIFIED
FRACTIONS ± 1/64
DECIMALS ± .005
ANGLES ± 2°

WIRING DEVICE-KELLEMS
HUBBELL INCORPORATED
BRIDGEPORT, CT

DR. BY SRE	APP. BY SRE
TR. BY	SCALE 1:1
CHK'D BY SRE	DATE 11/14/06

DIMENSION SHEET FOR CAT. NO. SEE TABLE

REPAIRABLE ☐ NON-REPAIRABLE ☒

B

M-10383

2